ARKTURA

Torsion Spring Adapter Clip

Panel System **Accessory**

Fueling Possibilities®

Torsion Spring Adapter Clip

Retrofit or Adapt Your Spaces With Ease

Our torsion spring adapter clip makes it easy to adapt t-grid systems to work seamlessly with a growing number of Arktura torsion spring panel systems. The clip system consists of two pieces, one connecting to the grid, and one to the panel at each attachment point, making upgrading your spaces while using existing grids a breeze.

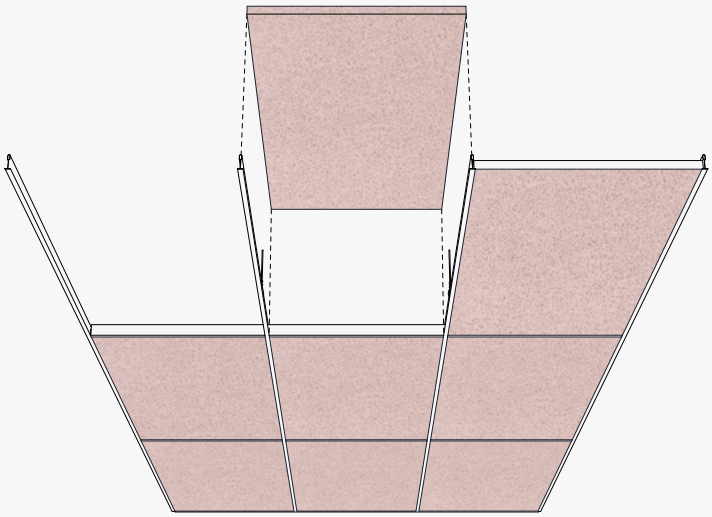

Before

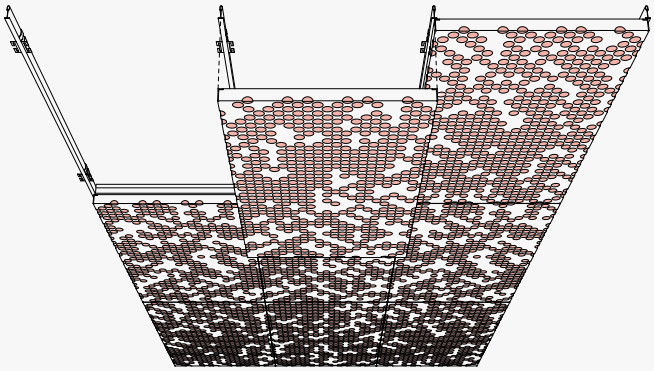

After

Components & Install

In a few simple steps, you will be able to adapt your existing T-Grid to be fully compatible with Arktura's Family of Torsion Spring Panels.

Torsion Spring Adapter Clip

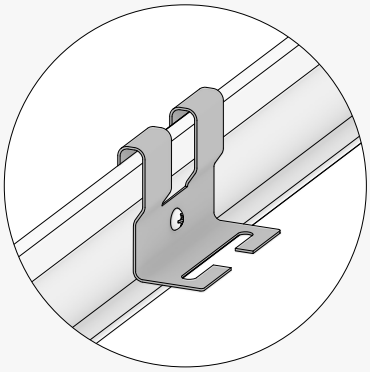

Attach our Torsion Spring Adapter Clip to your existing T-Grid, allowing it to accept Arktura's growing library of panel systems.

Torsion Spring Clip

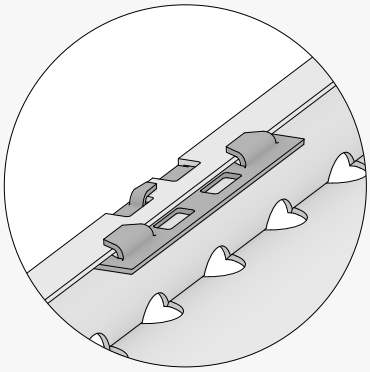

Our Spring Clip snaps sturdily onto panels allowing torsion springs to perfectly align* with the Adapter Clip.

Attached System

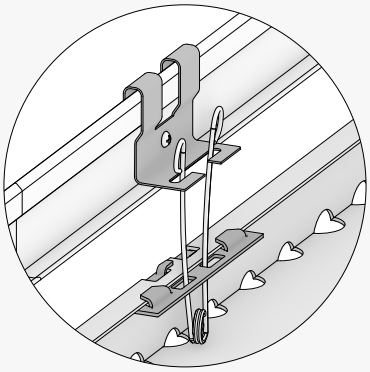

Simply run your torsion spring through the Spring Clip and Adapter, and push up to snap your panel into place!

ⓘ Compatible with 9/16" & 15/16" T-Grid Systems

* Alignment tool provided (not pictured).

Torsion Spring Clip

Compatible Systems

Adapt your T-Grid with our Torsion Spring Adapter Clip to use with our growing library of panel systems.

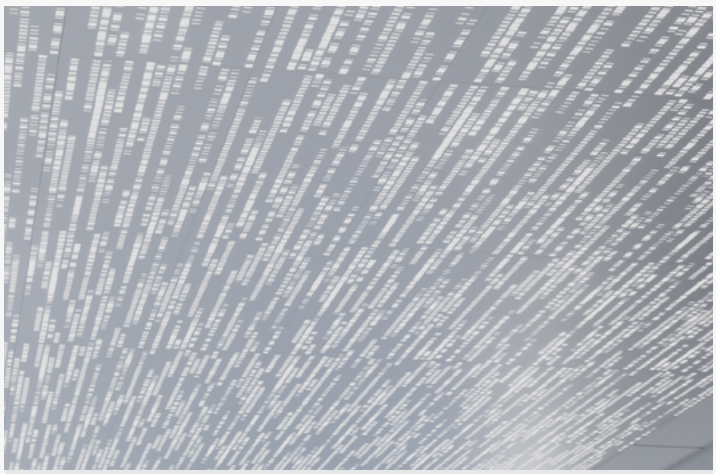

PARTICLE®

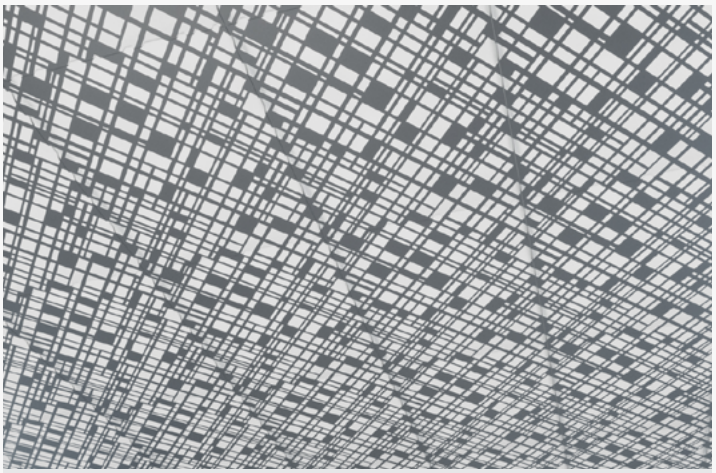

TRACE®

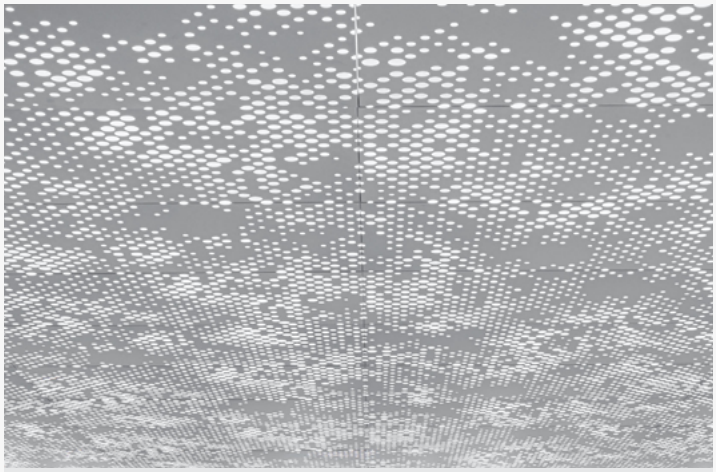

VAPOR®

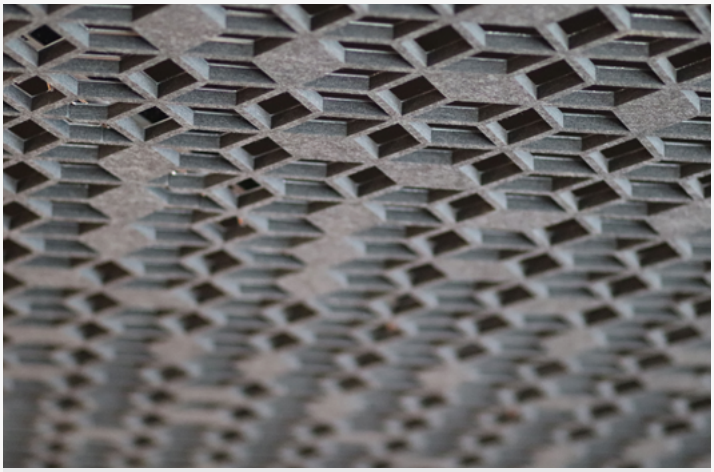

VAPORSOFT®

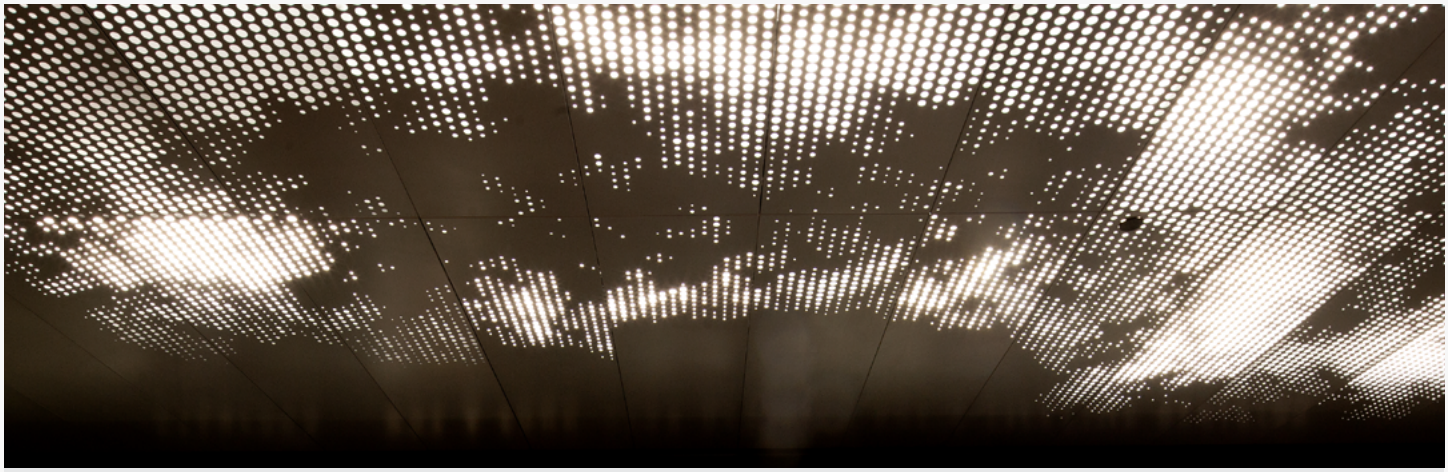

VAPOR GRAPHIC PERF®