ARKTURA

Vapor® Breeze

Ceiling & Wall **Panels**

Fueling Possibilities®

Our Key Features

Vapor® Breeze's 2'x4' powder-coated aluminum torsion spring panels create an organic feel by organic natural inspirations echoing the flurry of air, or the murmuration of butterflies. The pattern continues seamlessly from panel to panel, and with the option of Soft Sound® backers, you can evoke nature while reducing the amount of ambient noise. For added dynamic effect, try our integrated backlighting to illuminate your space and form a design that truly shines.

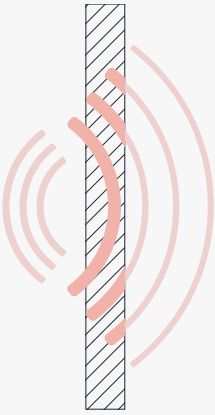

Reduce Noise & Enhance Acoustics

Vapor®'s optional Soft Sound® backer material reduces the impact of noise from everyday annoyances like ringing, typing, and chatter resulting in a more pleasant and productive environment. The Soft Sound® backer works in concert with the design to help reduce and control reverberations leaving a lasting impression at scales ranging from assembly halls to conference rooms.

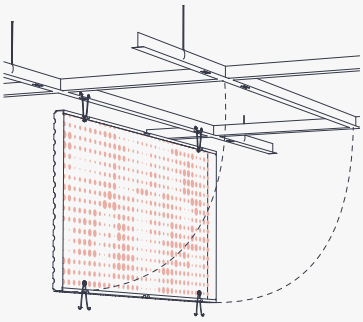

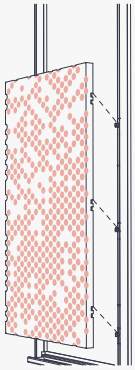

Easy Installation & Access

Vapor® panels offer easy install, using quick torsion spring attachment across standard ceiling grid systems or simple wall attachment using our Vertika® channel system.

Scan the QR or Click to Learn More about Vapor®

Our Key Features

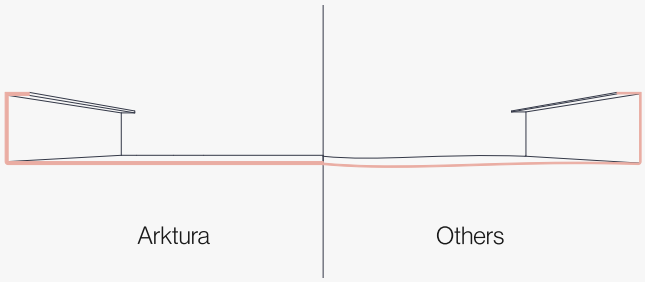

Superior Flatness & Strength

Vapor® panels are manufactured from aluminum that is on average 50% thicker than the competition, which in combination with our precision processes result in unrivaled flatness.

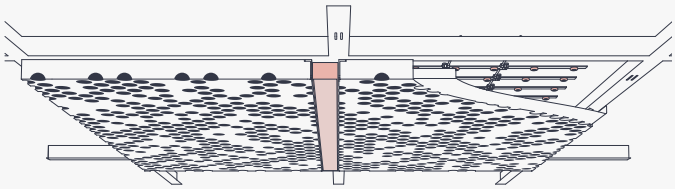

Integrated Lighting Options

Arktura's Vapor® line makes it easy to seamlessly add illumination and lighting effects to your projects, through available integrated InLine and Backlighting options.

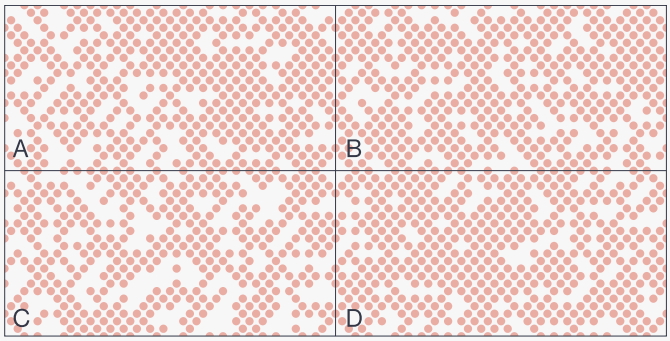

Preconfigured Solutions

Vapor® panels are scalable, seamlessly tileable preconfigured solutions designed with a dynamic array of criteria and effects in mind. Choose from our growing library of patterns to uniquely impact your project.

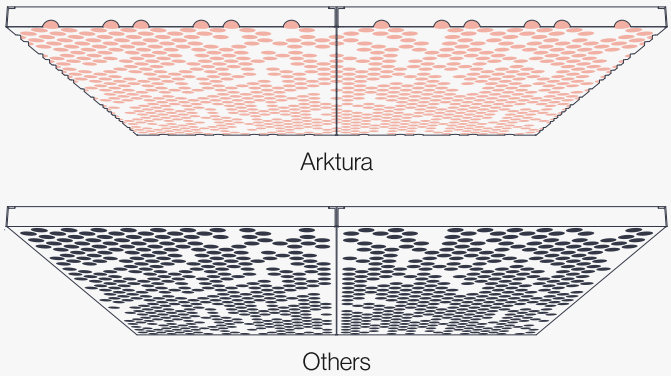

Continuous Pattern Aesthetic

Achieve uninterrupted patterning across your space. Vapor® patterns have perforations that wrap around the edges of each panel, concealing where patterns start and end.

Inspiration

Create Dynamic Texture and Enhance Acoustics in any Interior Space

Illuminate your Space with Arktura Backlighting

Make an Eye-Catching Entrance

Overview

1 Understanding the System

2 Optional Accessories

3 Available Finishes

4 Product Specifications

1 Understanding the System

Standard Panel

Vapor® is a modular accessible aluminum panel system designed to work with torsion grid. Customization is available.

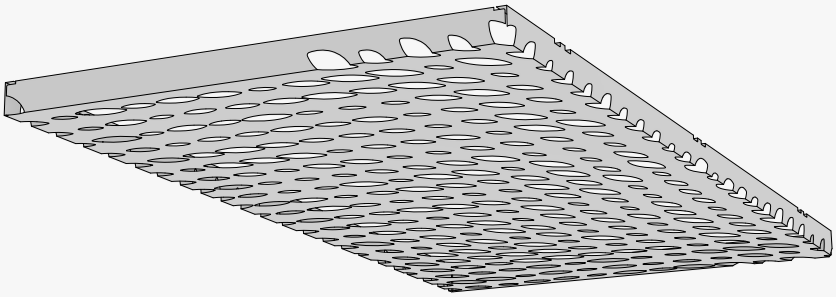

Seamlessly Join Walls & Ceilings

Vapor® easily transitions from one plane to another and around corners.

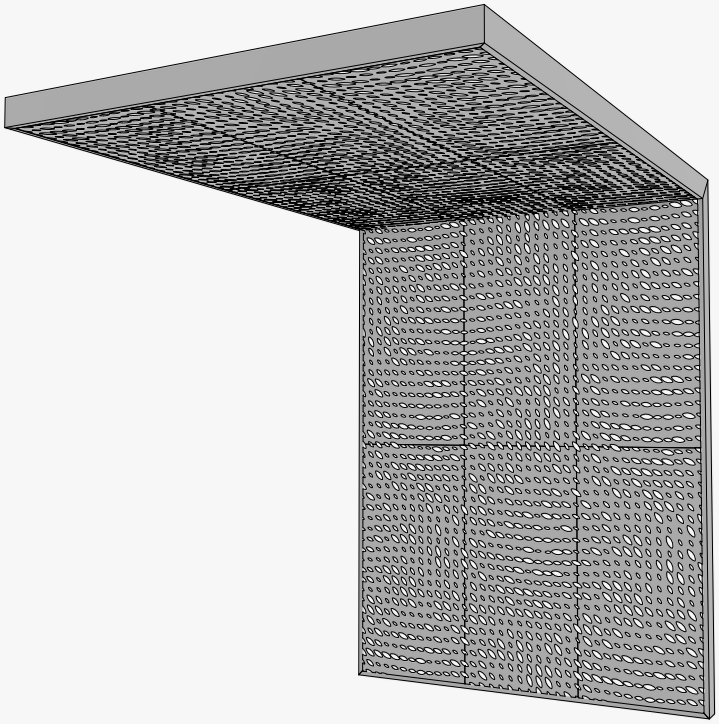

1 Understanding the System

Understanding the Panel

The pattern surface is created using 4 unique tiles in a specific arrangement that minimizes visual repetition across your space.

Panel A: 27% Open
Panel B: 23% Open
Panel C: 24% Open
Panel D: 23% Open

* Vertika® Trim

Ceiling Section

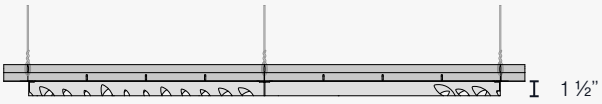

Wall Section

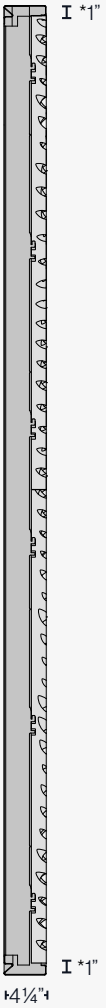

Panel Configuration, Wall or Ceiling

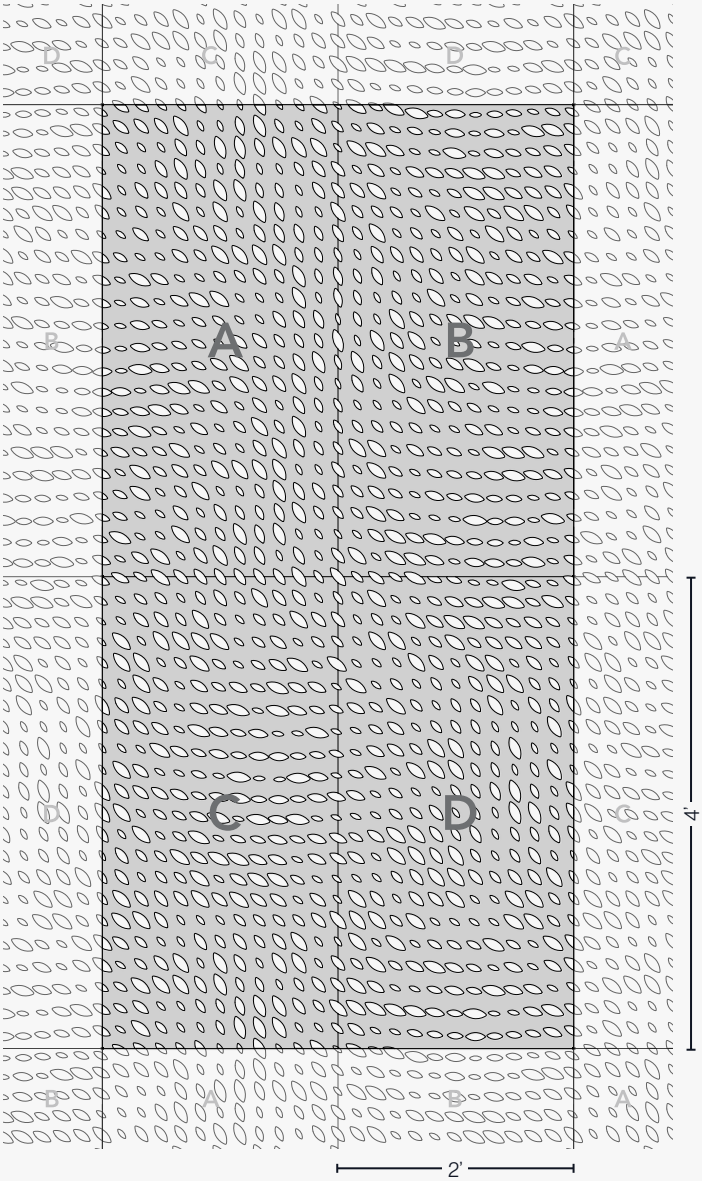

All dimensions nominal.

1 Understanding the System

Accessory Options - Ceiling

- Frosted light diffusing backer
- ½" acoustic backer
- Backlight
- InLine downlight

Check out our Configuration examples on PAGE 10.

* A Specific Inline light panel is used to accomodate the width of the fixture within the 2' width.

Torsion Spring Adapter Clip

Interested in using standard t-grid? Use our optional Torsion Spring Adapter Clip.

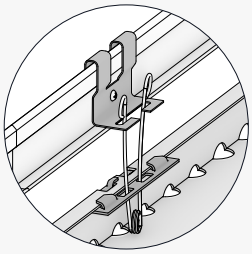

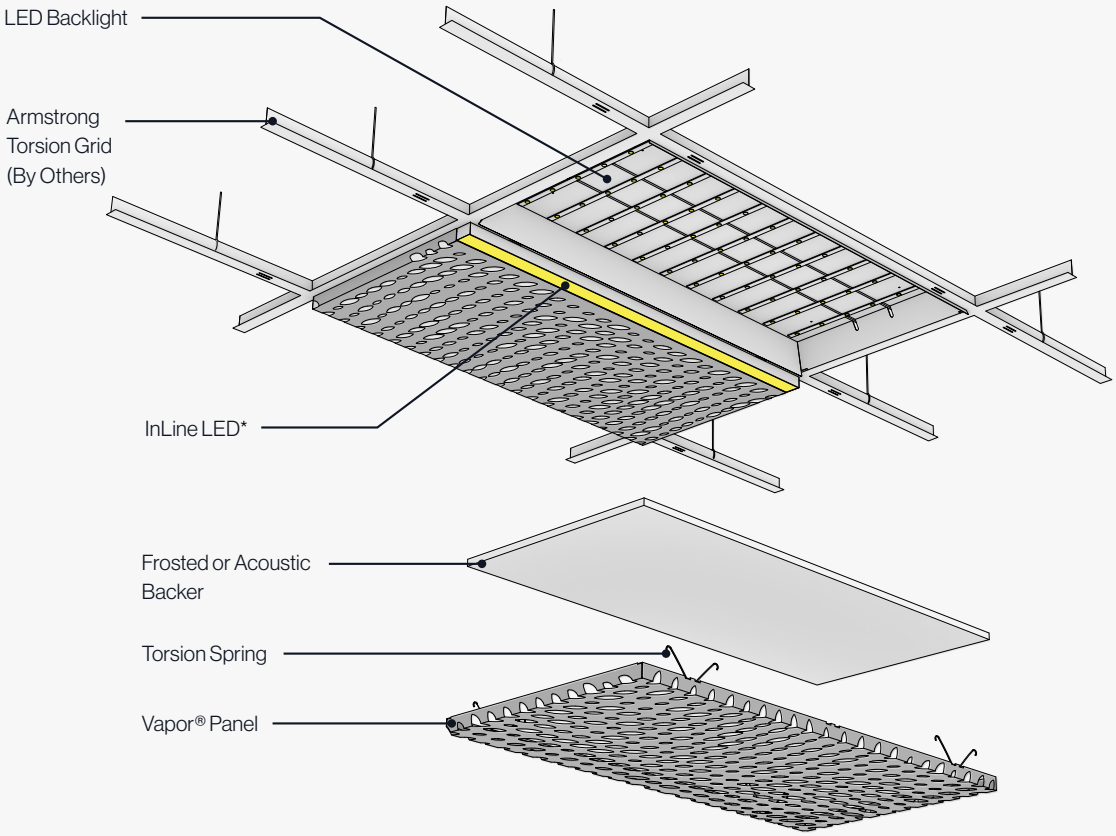

Attachment System - Ceiling

Torsion Spring clips allow for rapid install and easy access for maintenance above the grid post install.

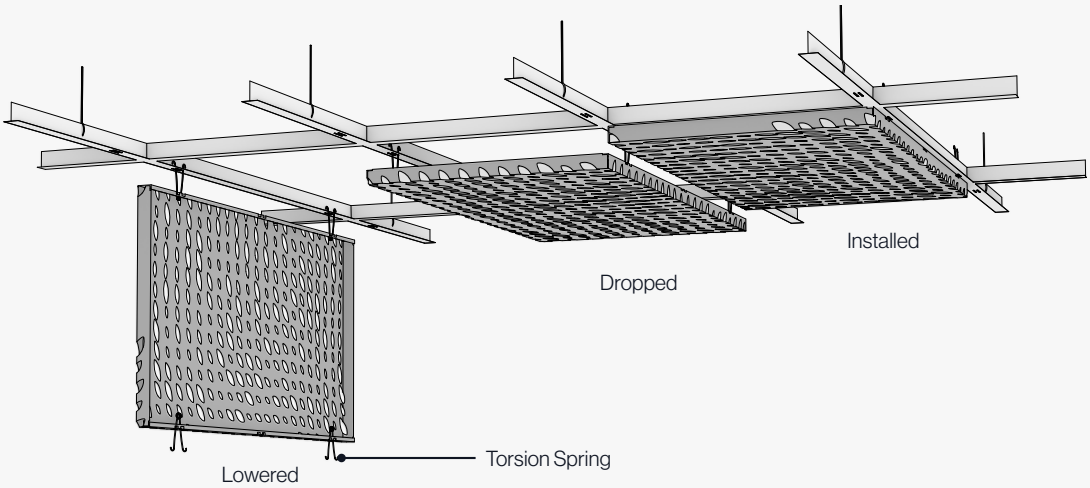

1 Understanding the System

Accessory Options - Wall

- Frosted light diffusing backer
- ½" acoustic backer
- Backlight
- InLine light

ⓘ Check out our Configuration examples on PAGE 10.

* A Specific Inline light panel is used to accomodate the width of the fixture within the 2' width.

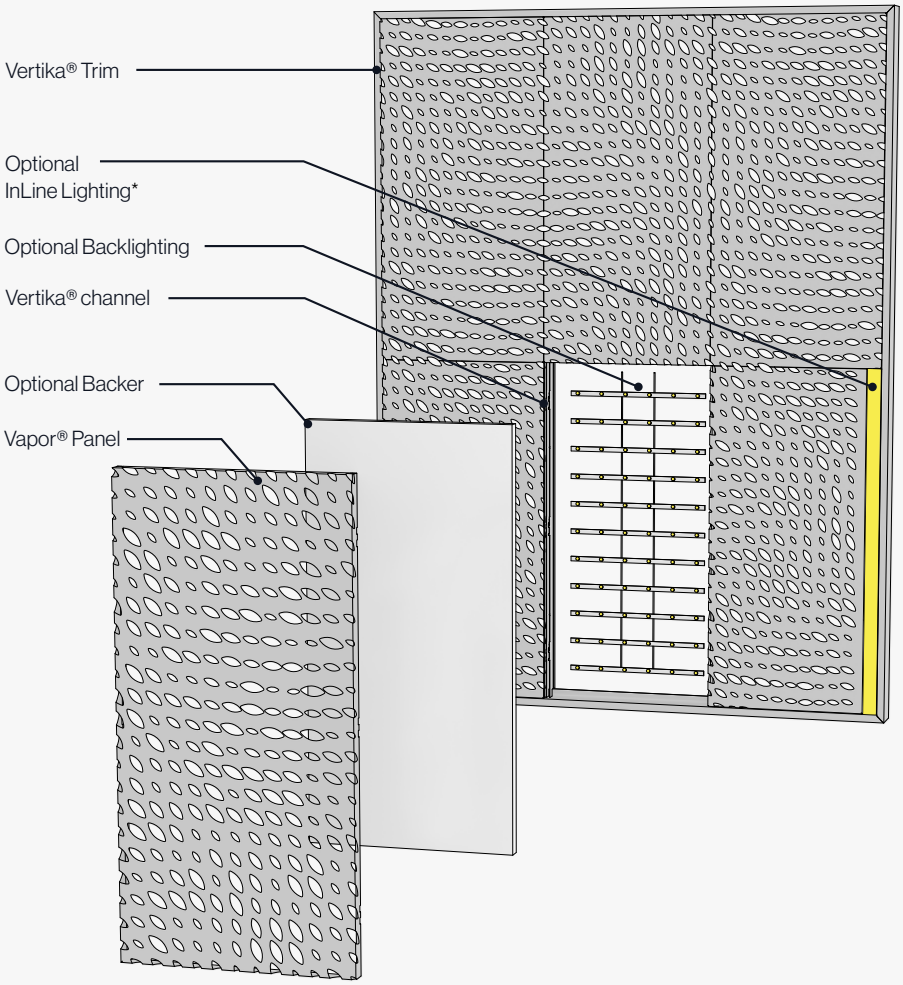

Attachment System - Wall

Panels are easily installed or removed by sliding onto or lifting off from the system's Vertika® channel hooks.

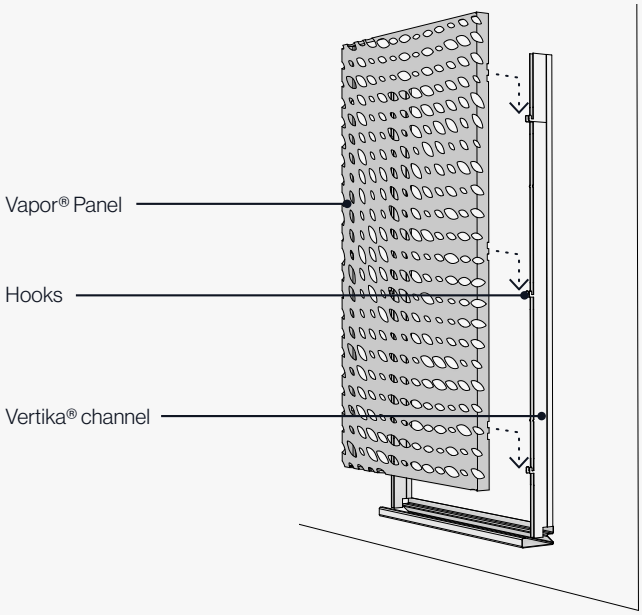

2 Optional Accessories

Lighting

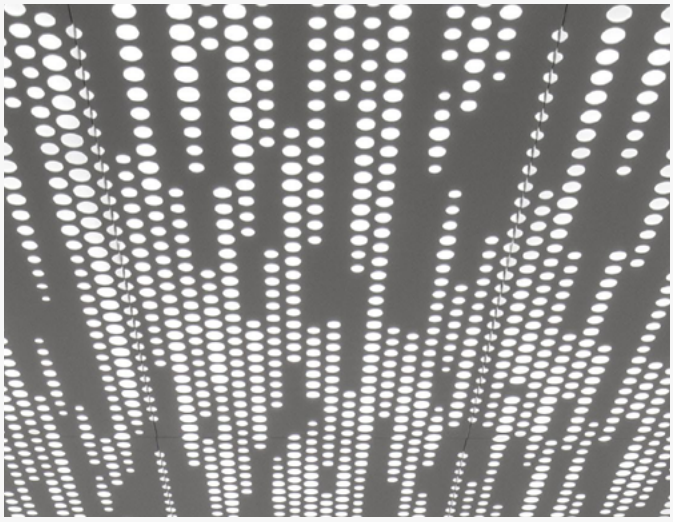

Backlighting

Arktura Backlighting allows you to fully illuminate your ceiling and wall panel installs, creating beautiful evenly lit surfaces. These fixtures are available in high and low output versions, both dimmable. See Backlighting specs details on PAGE 15.

InLine Lighting

Our InLine Light sits flush with the face of the panels while conveniently attaching to the bottom of the grid. The fixture is available in 4' and 8' lengths. A special side-light Vapor® panel allows the light to straddle its 4' edge while staying within a 24" overall width. See Inline Lighting specs details on PAGE 17.

Backers

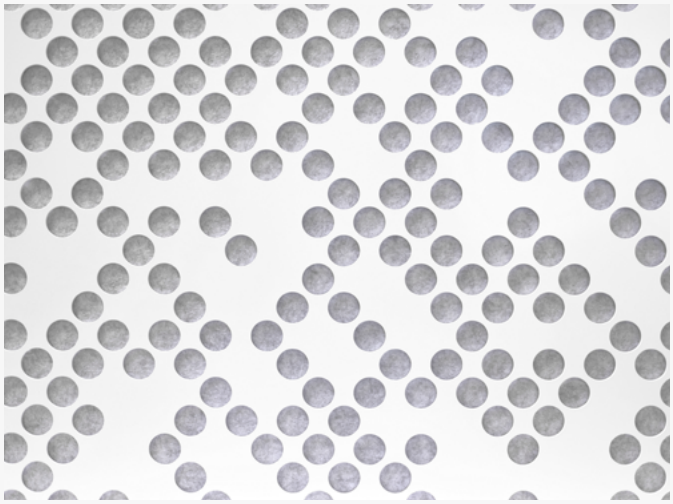

Acoustic Backer

We offer various options of Soft Sound® panel inserts to achieve a variety of NRC ratings. Please refer to our True NRC® table of ratings.

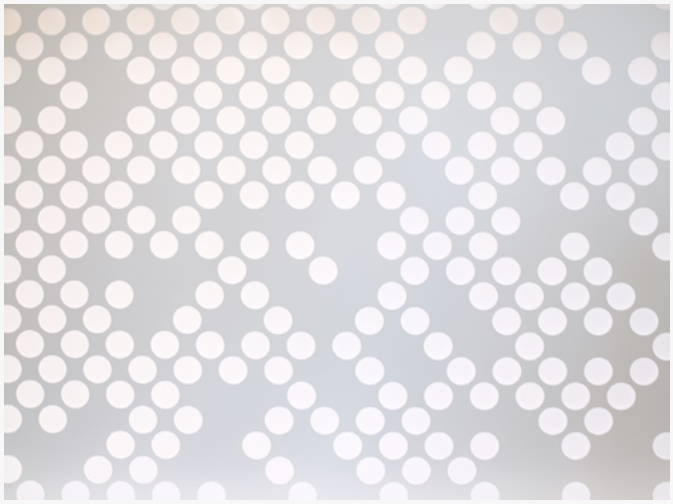

Translucent Backer

Our proprietary light diffusing backers can be used to create a functional or decorative lighting effect in any space.

ⓘ Illustrative images. Patterns may not match the product.

ⓘ Lighting powered by Arktura Driver. Refer to installation manual or contact your rep for more info.

2 Optional Accessories

Possible Configurations

Refer to the chart and corresponding diagrams below for available configuration options.

	No Backer	Translucent Backer	Soft Sound® Backer
No light	A	B	C
Backlight		D	
InLine	E	F	G

ⓘ Looking to combine backlight with acoustic performance in the same panel?
Check out our VaporSoft® line.

A

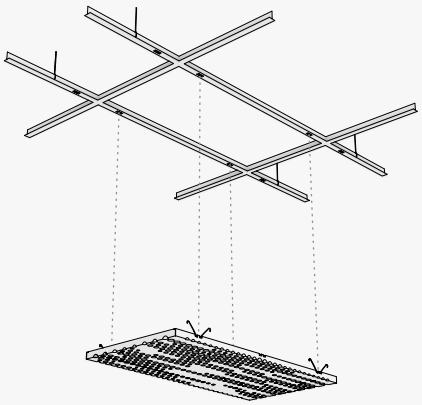

B

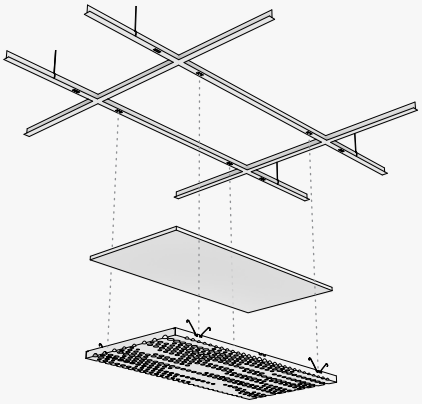

C

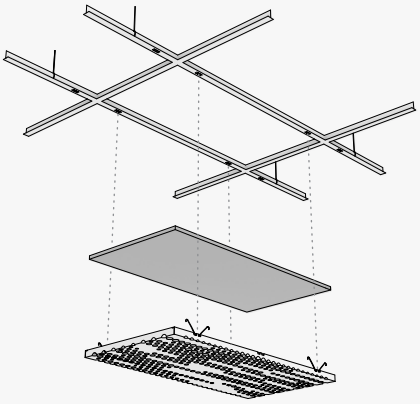

D

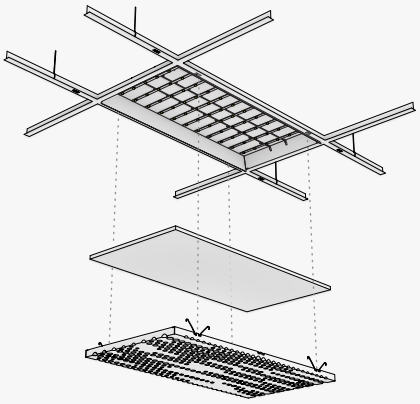

E

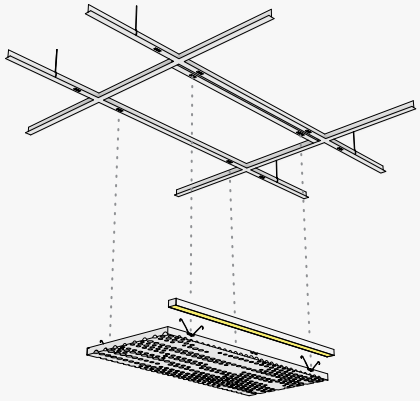

F

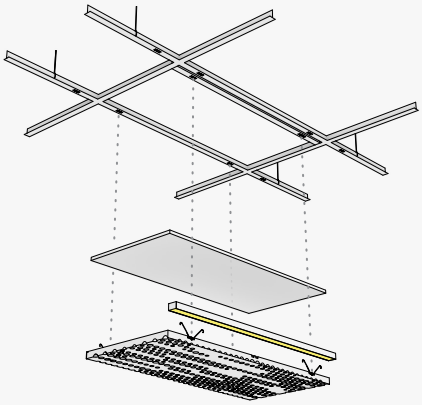

G

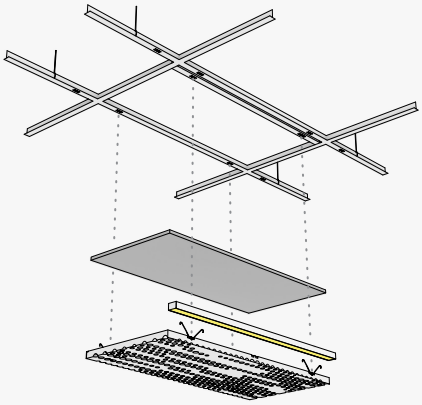

ⓘ Illustrative diagrams. Patterns may not match the product.

3 Available Finishes

Panel Color

Powder Coat
Standard Finish
Inspired by our
Vivids Collection

Seaweed ●	Oasis	Mint ●●	Tropica ●●	Moonwalk
Berry	Ruby ●	Papaya ●	Lemonade ●●	Pismo ●

Powder Coat
Standard Finish
Inspired by our
Elementals Collection

Garnet ●	Seaside ●	Haze	Seaglass ●	Harvest
Earthen ●●	Cacao ●●	Terra ●●	Evergreen ●	Basalt ●●

Available in:
- ● **AAMA 2604** Color
- ●● **AAMA 2604** or **2605** Color

+Non stock, fee **upcharge**

3 Available Finishes

Panel Color

Powder Coat
Standard Finish
Inspired by our Essentials Collection

- T-Grid White* (Matte) ●●
- Arktura White (Matte) ●●
- Brilliant White+ (Gloss) ●
- Silver Metallic (Semi Gloss) ●●
- Jet Black (Matte) ●●
- Aviator Gray (Gloss) ●●
- Aviator Gray (Matte) ●●
- Steel Gray ●●
- Shadow ●●
- Midnight ●●
- Coffee ●
- Raw Umber ●
- Caramel ●●
- Sandstone ●●
- Oat ●●
- Sunflower+ ●
- Torch
- Spirit Red (Matte) ●
- Redwood ●
- Boysenberry ●
- Azure+ ●
- Blue Steel+ ●
- Harbor Blue ●
- Forest Green ●●
- Hartford Green ●

Powder Coat
Premium Metallic Finish

- Chilled Champagne (Semi Gloss) ●●
- Sun Kissed Bronze ●
- Burnished Bronze (Semi Gloss) ●●

Custom Powder Colors
We offer premium non-stock RAL and custom color match options as well. Contact your sales rep for more information.

- Non-stock Metallic
- Non-stock RAL

Available in:
- ● **AAMA 2604** Color
- ●● **AAMA 2604** or **2605** Color

+Non stock, fee **upcharge**

* This color was designed to pair with Armstrong color "WH" grid and trim.

3 Available Finishes

Panel Color - Pure+FreeForm & Powder Coat

Metallic Patinas*
Premium

Hollywood

Parisian Rust

Hampton Brass

Vintage Nickel

Metal Powder Coat Color

Slate

Oxide

Goldenrod

Pewter

Metallic Wood Texture*
Premium

Roma Noce

Rustic Timber

Autumn Cherry

Pearl White Oak

Miele Maple

Metal Powder Coat Color

Mocha

Terracota

Gingerbread

Flax

Flax

* Pure + FreeForm trims are only available for Wall application. If the installation has a transition between wall and ceiling, Powder Coating must be used.

ⓘ All premium and standard finishes shown are designed for interior specifications. Products may be specified for exterior use, and with alt treatments required by local code or facility, including custom color match or specialty finishes. Any changes to specification from interior standard or interior premium will result in a custom powder coat fee.

3 Available Finishes

Optional Translucent Backer

Polycarbonate
Available in interior and UV stable exterior options.

Frosted

Optional Soft Sound® Backer

Soft Sound® Vivids
Standard

Nori | Tidal | Seafoam | Bamboo | Cosmos

Plum | Azalea | Sorbet | Buttercream | Blush

Soft Sound® Elementals
Standard

Ube | Baltic | Caspian | Cortez | Honey

Sienna | Truffle | Morel | Cypress | Pebble

Due to the nature of non-woven materials, light may pass through Soft Sound® in any thickness or color. A translucent appearance is most apparent in lighter colors and thin material when a light source is present behind the material. Arktura makes no claims or warranties about the material performing as opaque in any circumstance. To verify a products performance for light transmittance, a mockup of the specific intended use is recommended.

3 Available Finishes

Optional Soft Sound® Backer

Soft Sound® Essentials
Standard

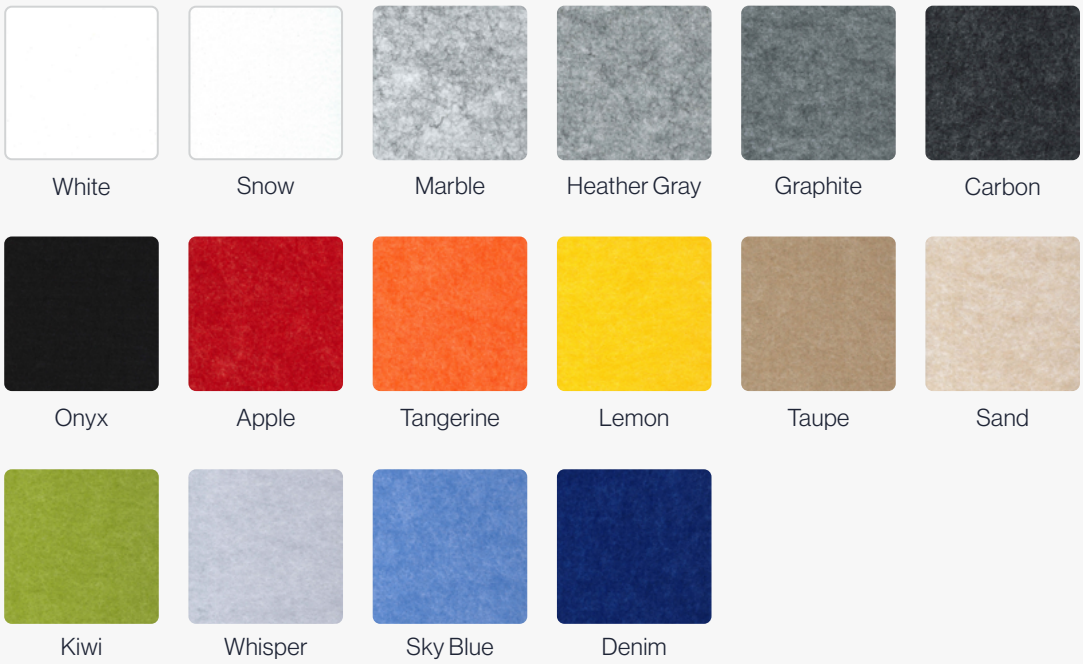

Soft Sound® Wood Texture
Premium

ⓘ As with natural wood, variation in color and grain is expected and grain will not align across panels.

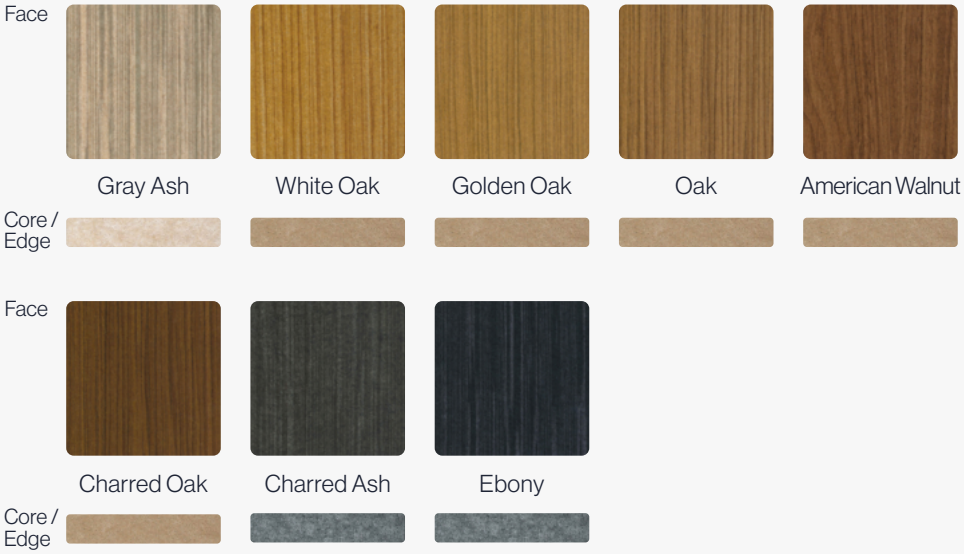

ⓘ Due to the nature of non-woven materials, light may pass through Soft Sound® in any thickness or color. A translucent appearance is most apparent in lighter colors and thin material when a light source is present behind the material. Arktura makes no claims or warranties about the material performing as opaque in any circumstance. To verify a products performance for light transmittance, a mockup of the specific intended use is recommended.

4 Product Specifications & Certifications

System Specs

Panel Size (WxHxD)	2' x 4' x 1½"
Material	Aluminum
Openness in Plan	24%
Fire Rating	ASTM E84 - Class A
Acoustics (with optional Soft Sound® backer)	True NRC® 0.80: Ceiling ; E-300 Method True NRC® 0.75: Wall ; F-70 Method
Ceiling Attachment	Torsion Grid
Wall Attachment	Vertika® Wall (Refer to Vertika® Brochure)
Accessibility	Torsion Spring Hinge
Trimmability	Yes, per installation manual
Optional Accessories	Acoustic Backer, Translucent Backer, Backlight, InLine Light, Torsion Spring Adapter Clip

This product may be the subject of one or more patents or pending patent applications.
See **www.arktura.com/intellectual-property** for related patent information.

Arktura Backlighting Specs

Available in dimmable low and high output variations, gives you the power to illuminate spaces and create dynamic visual effects.

Ceiling

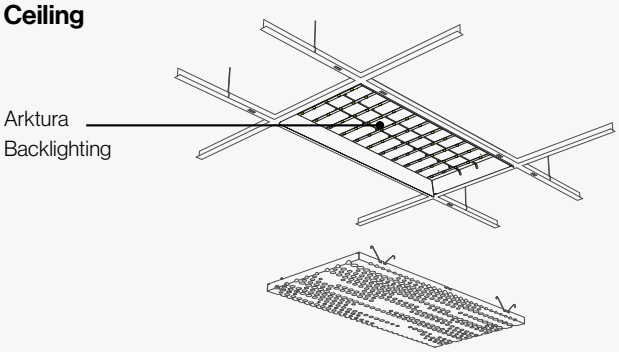

Sections - Ceiling

Front view

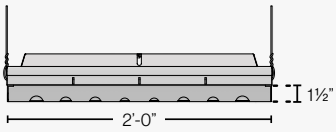

Side view

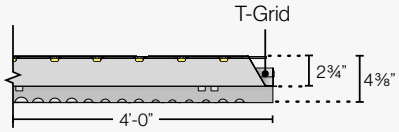

Vertika® Wall

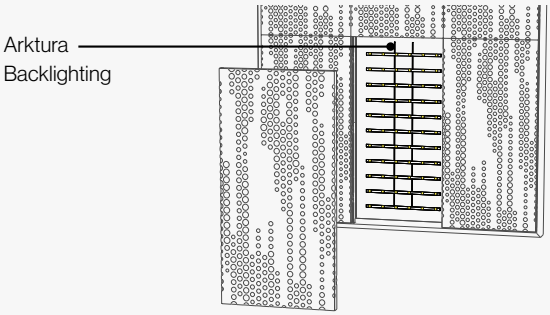

Sections - Wall

Top view

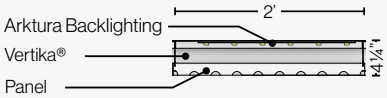

Side view

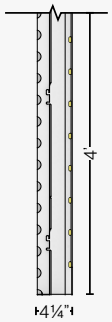

Specs

Product Features	Arktura Backlighting Eco 2x4 Panel	Arktura Backlighting 2x4 Panel
Power Consumption	18W 24VDC .75A	65W 24VDC 2.7A
Delivered Lumens	Please Reference Next Page for Specific Openness by Pattern	
CRI	90+	
Color Temperatures	3000K, 3500K, 4000K	
Size (LxWxD)	24"x48"x3 1/4"	
Optics/Beam Angle	160° Batwing Lens Per LED	
Operating Temperature	-20C - +50°C (-4F - +122°F)	
Dimming Options	TRIAC/Phase, ELV, MLV, 0-10V, 1-10V When Paired with Arktura LED Driver	
Emergency	50W Emergency Battery Kit AK-EB0001**	
Cable	Factory Installed Plenum Rated CL3P Cable, 16AWG 10ft Whip	
IP Rating	IP64	
Enviroment	Suitable for Wet, Damp or Dry locations	
Markings	ETL Listed, Complies with UL 2108 & CSA C22.2#250.13:2020 Ed.4+U1	
Lifetime	L70 - 50,000 hours	
Warranty	5 Years, Limited	

Photometric

Located At Horizontal Angle = 0, Vertical Angle = 0
 # 1 - Vertical Plane Through Horizontal Angles (0 - 180) (Through Max. Cd.)
 # 2 - Horizontal Cone Through Vertical Angle (0) (Through Max. Cd.)

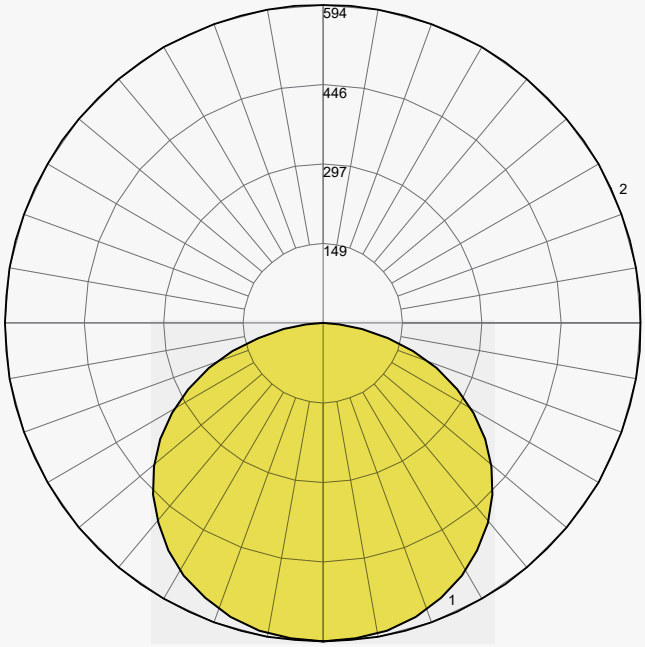

* Represents a 40 % Openness Pattern.
** Emergency battery kit sold separately.

ⓘ Illustrative images.
Patterns may not match the product.

Arktura Backlighting % Open & Lumen Output

Backlighting % Open & Lumen Output

Product	% Open	18W Arktura Backlight Eco Lumen Output	65W Arktura Backlight Lumen Output
Vapor® Cora	68%	1176	3361
Vapor® Bloom	20%	400	1118
Vapor® Breeze	23%	457	1276
Vapor® Byte	6%	120	354
Vapor® Cluster Dense	40%	759	2124
Vapor® Cluster Sparse	10%	203	577
Vapor® Cumula	18%	362	1012
Vapor® Element 605	6%	120	354
Vapor® Element 3212	32%	621	1734
Vapor® Element 3428	34%	656	1833
Vapor® Frequency	10%	203	577
Vapor® Liana	17%	342	959
Vapor® Gradients	17%	342	959
Vapor® Sky	19%	381	1065
Vapor® Pixel	19%	381	1065
Vapor® Syntax	6%	120	354
Vapor® Trail	24%	476	1328
Vapor® Shift X	53%	965	2723
Vapor® Transit	10%	203	577
Vapor® Bond	7%	141	410
Vapor® Verve	14%	283	797
Vapor® Dappled	34%	656	1833
Vapor® Horizon	33%	639	1784
Vapor® Radia	34%	656	1833

Product	% Open	18W Arktura Backlight Eco Lumen Output	65W Arktura Backlight Lumen Output
VaporSoft® Cluster Dense	40%	759	2124
VaporSoft® Cora	68%	1176	3361
VaporSoft® Trail	24%	476	1328
VaporSoft® Cluster Sparse	10%	203	577
Trace® Curved	55%	994	2811
Trace® Slide	8%	162	466
Trace® Skew	62%	1095	3112
Trace® Slant	43%	808	2266
Trace® Straight	54%	979	2767
Particle® Ion	5%	99	297
Particle® Code	9%	182	522
Particle® Phase	4%	78	241
Particle® Fuse	4%	78	241
Particle® Urban	10%	203	577
Delta Drop® 2x4 Full Pattern	12%	241	653
Delta Drop® 2x4 Half Pattern	7%	134	390
Delta Drop® 4x4 Full Pattern*	14%	538	1514
Delta Drop® 4x4 Half Pattern*	7%	268	779

* Delta Drop® 4x4 shown with two Light Fixtures per panel.

Arktura InLine Lighting Specs

Makes it easy to seamlessly integrate linear lighting into the design of your paneling.

Ceiling

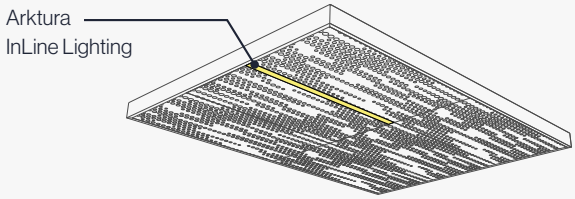

Elevations - Ceiling

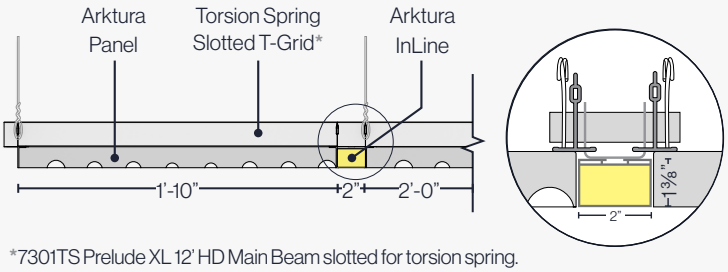

*7301TS Prelude XL 12' HD Main Beam slotted for torsion spring.

Vertika® Wall

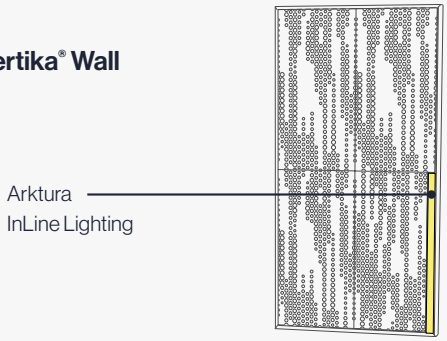

Top View - Wall

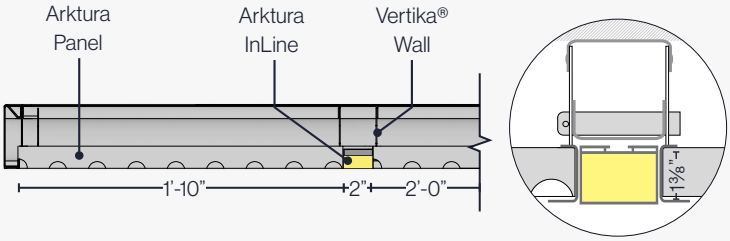

Arktura InLine System

	Description	W/ft	Fixture Watts	lm/ft	Fixture Lumens	LM/W*
4 Foot	**Arktura InLine 3.5 W/ft - 4'**	3.5	14	349	1396	102
	Arktura InLine 5W/ft - 4'	5	20	525	2100	114
	Arktura InLine 7W/ft - 4'	7	28	614	2457	98
	Arktura InLine 10W/ft - 4'	10	40	1021	4084	110
8 Foot	**Arktura InLine 3.5W/ft - 8'**	3.5	28	349	2792	102
	Arktura InLine 5W/ft - 8'	5	40	525	4200	114
	Arktura InLine 7W/ft - 8'	7	56	614	4914	98
	Arktura InLine 10W/ft - 8'	10	80	1021	8168	110

Side - Length Options

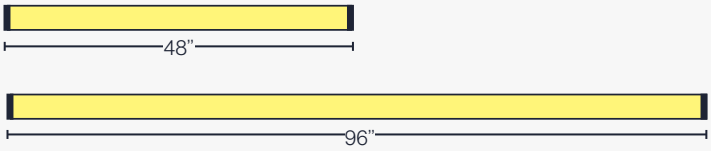

Universal Specs

CRI	90+
Color Temperatures	3000K, 3500K, 4000K**
Operating Temperatures	-20C - +50°C (-4F - +122°F)
Dimming Options	TRIAC/Phase, ELV, MLV, 0-10V, When Paired with Arktura LED Driver
Emergency	50W Emergency Battery Kit AK-EB0001***
Cable	Factory Installed Plenum Rated CL3P Cable, 18AWG 4FT Cable
Enviroment	Indoor Locations Only
Markings	ETL Listed, Complies with UL 1598 & CSA C22.2#250.0:2021 Ed.5
Lifetime	L70 - 50,000 hours
Warranty	5 Years, Limited

Photometric

Located At Horizontal Angle = 0, Vertical Angle = 0
 # 1 - Vertical Plane Through Horizontal Angles (0 - 180) (Through Max. Cd.)
 # 2 - Horizontal Cone Through Vertical Angle (0) (Through Max. Cd.)

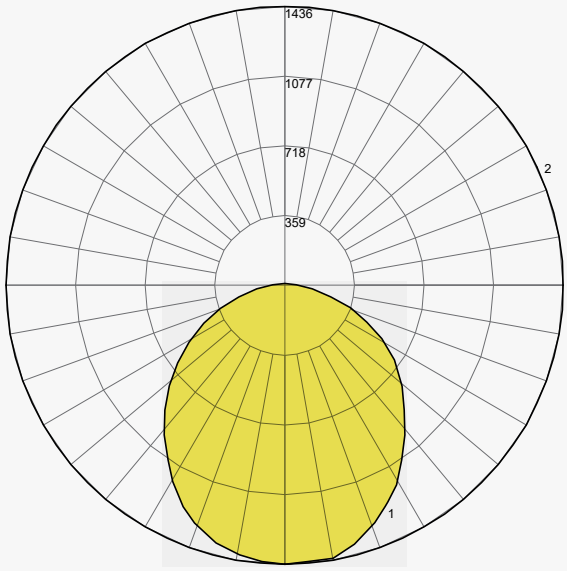

* Efficiency at 3500K 90CRI
** Consult factory for custom color temperatures.
*** Emergency battery kit sold separately.

ⓘ Illustrative images.
Patterns may not match the product.